Agilent Technologies **Life Sciences and Chemical Analysis Service Note**

Service Note Number: 1260-051 Supersedes: False

Title: Torques recommended for pump head maintenance

Summary:

New torque wrench tools are available for repair and maintenance of 1200 Infinity Series pump heads.

Parts Required:

part number	description
5067-5688	Torque Wrench 1-25 Nm (updated)
5067-4699	1290 Infinity pump service kit (updated)
5067-5691	19 mm open wrench no torque (new)
G4220-20041	Hexalobular Bit 10 x 24 mm (new) comes with torque wrench

Set-up ongoing:

5067-5689	Adapter for torque wrench (new) comes with new torque wrench
5067-5690	14 mm open wrench for torque wrench adapter (new) comes with new 1290 service kit

Situation:

Manufacturing processes have been optimized in order to minimize failure rates and scrap. Part of this improvement process has been a definition of optimum torques for the assembly of pump heads.
These torques have been published in pump manuals already some time ago. However up to now Agilent did not provide tools for applying such torques explicitly no wrench was available for 14 mm parts like valves or 1290 Infinity pumps outlet filters.

Solution/Action:

See attached images torques_1260 and torques_1290 for an overview of torques for 1260 and 1290 pump heads.

New tools have been set up or updated. Use new tools for pump maintenance and repair. Please note that the new 14 mm wrench is not compatible to the old torque wrench. Unfortunately there is no 14 mm wrench which would fit to the original torque wrench.

CAUTION

Please note that torque wrench open wrench and adapter have an orientation up vs. down. The pin needs to point to the same direction as the clamp see image torqueWrench.png. If installed and used upside down the torque will not be limited by the tool so it is too high and will damage parts.

Serial Numbers:

Serial Low	Serial High

Attachments:

torqueWrench.png

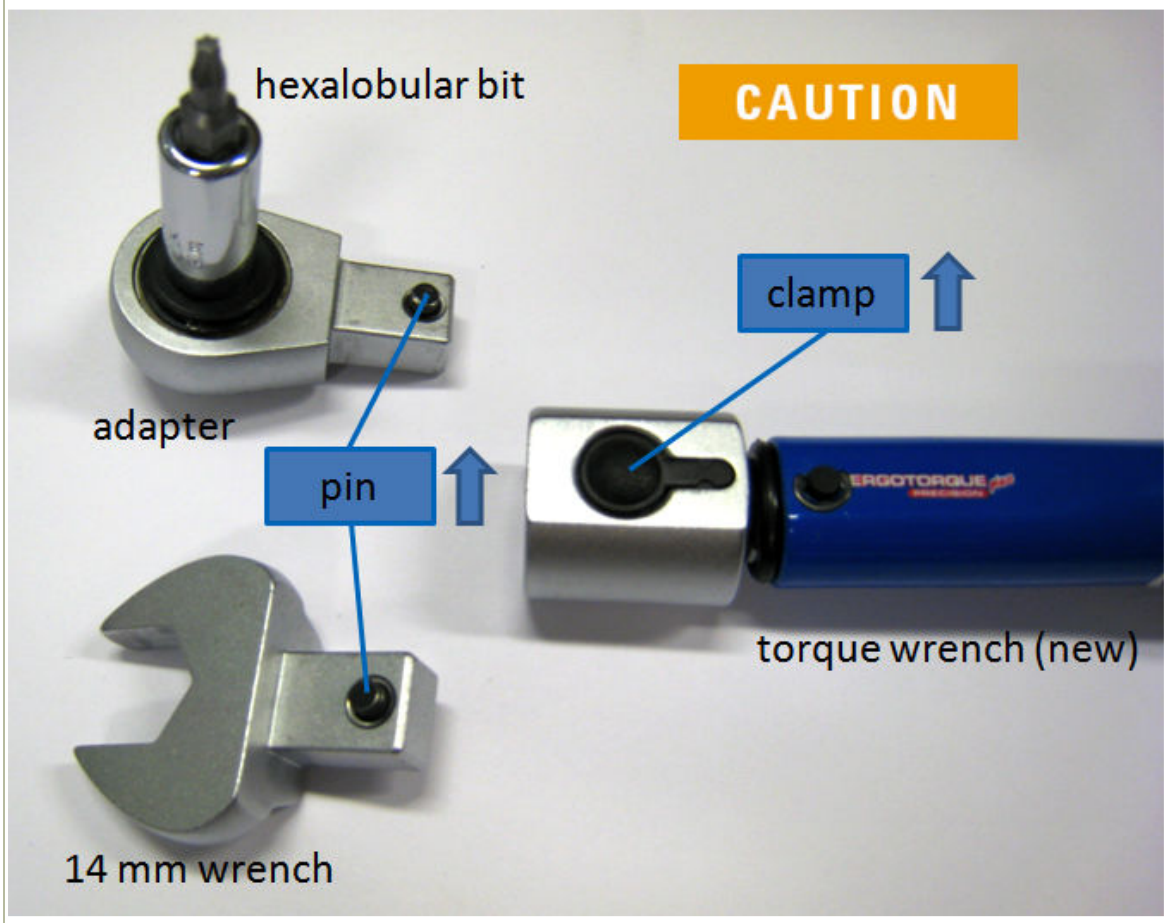

torques_1260.png

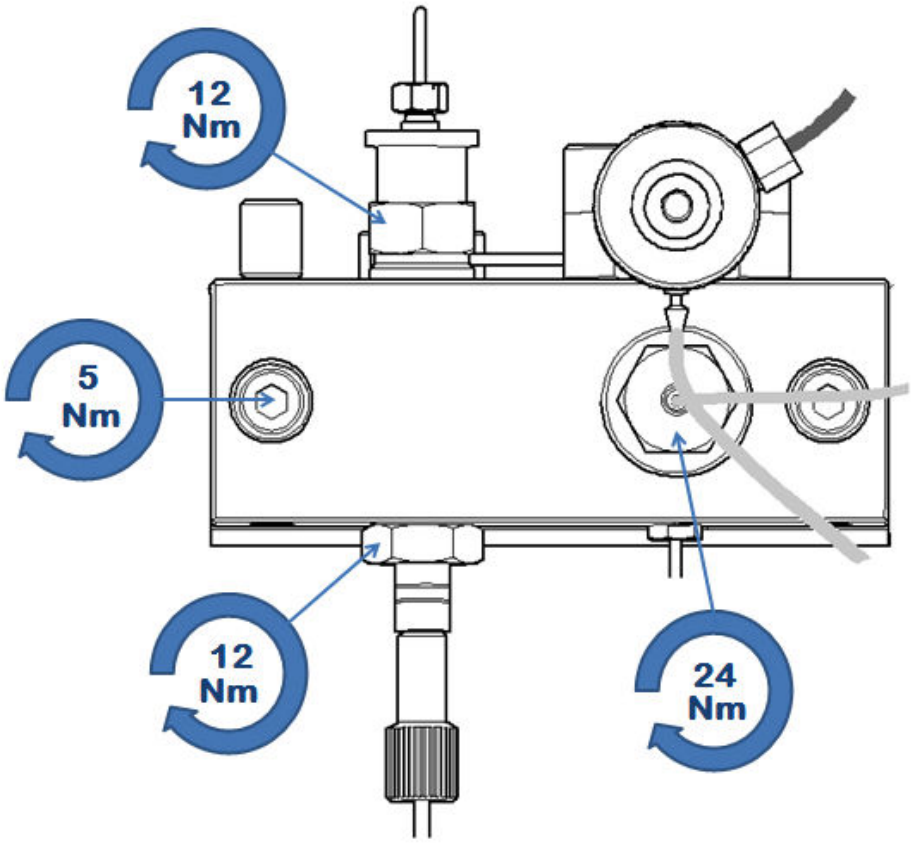

torques_1290.png

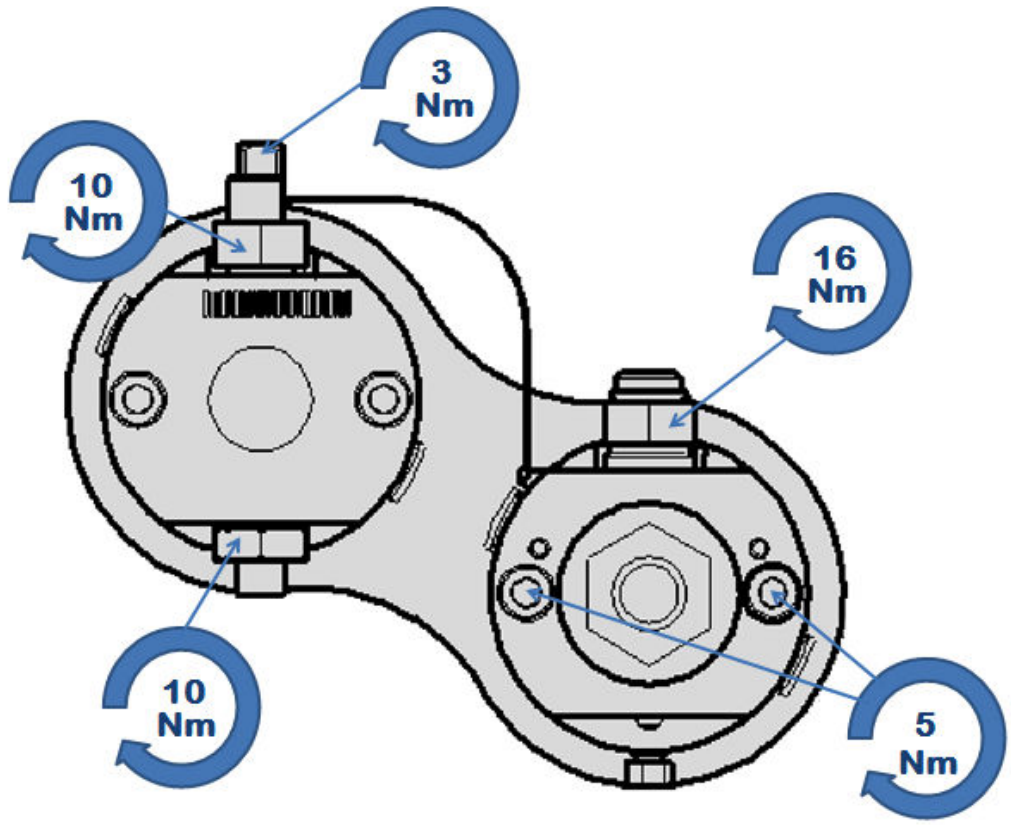

Additional Information:

Q: Can't I do this without a torque wrench? It worked in the last 20 years as well.
A: We have seen that standardized torques helped a lot improving the reliablility of our modules and passing production final tests. For our manufacturing technicians this has become mandatory. For you this will help improving quality and customer satisfaction.

Q: How do I see if my torque wrench is old or new?
A: Old ones are labelled as Promat 2-25 Nm
new ones as KSTools Ergotorque plus 1-25 Nm.

Q: If I apply the specified torque my pump does not pass the leak rate test. What should I do?
A: Check for other reasons like bubbles or capillary connections. If the problem still exists e.g. a gold seal of a valve may have been damaged. Applying additional force may fix the leak but may also reduce the valve performance or life time. Do not tighten a system under pressure especially at high pressures.

Q: What about other valves?
A: Manufacturing uses a torque of 8 Nm for the AIV but the AIV screw is not accessible through standard tools. Apply reasonable torque. No torque has been specified for the purge valve.

Q: You mention a hexalobular bit what do I need it for?
A: Nothing yet. Screws which fix the heat exchanger to 1290 Infinity pump heads are going to be replaced by a hexalobular version. A popular brand for hexalobular screws is Torx.

Related Products:

Date:4/17/2013 7:27:59 AM

Administrative Information:
Classification: Information Only
Author: EBERHARDINGER ULRICH (A-Germany ex1)
Additional Information:

Printed in U.S.A.